AURORA® LIGHTING

WallE™

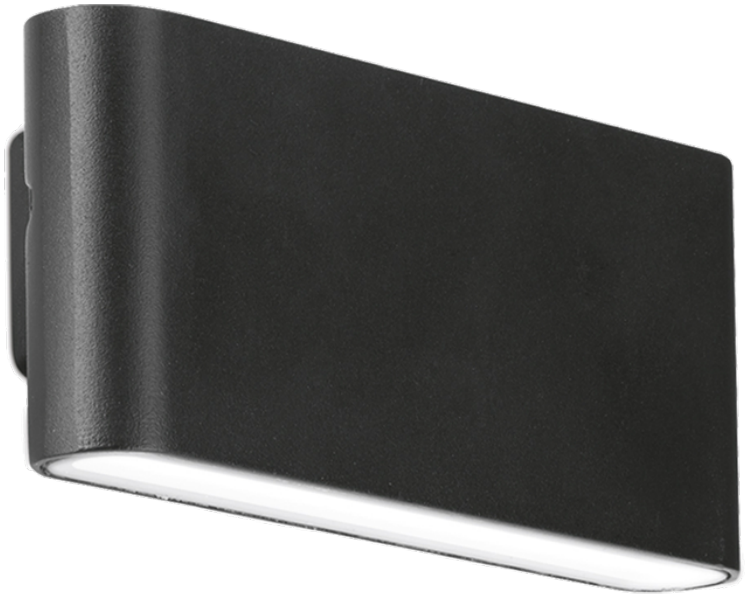

Product Description: WallE™ 6W IP65 Fixed Down Wall Light

Range of decorative surface mounted aluminium LED wall lights which are IP65 rated for use in a range of environments and applications. Available as a fixed down and up/down luminaire in white, black and grey finishes.

SKU Code	Wattage	Colour	Lumens	Lumens/Watt	Finish Colour	SKU Type
EN-WL81BLK/40	6	4000	310	52	Black	Non Dimmable
EN-WL81G/40	6	4000	310	52	Grey	Non Dimmable
EN-WL81W/40	6	4000	310	52	White	Non Dimmable

Line Drawing

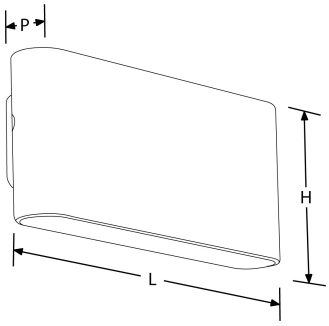

Polar Curve

Colour

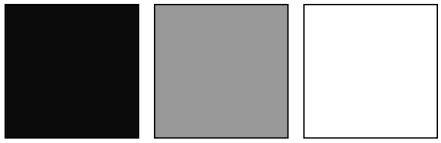

Black Grey White

Feature & Benefits

- IP65 aluminium integrated LED wall light
- High power 4000K white LEDs
- Non-dimmable integral LED driver
- 3 year warranty

Product Specs:

Input Voltage	220~240V AC
IP Rating	IP65
IK Rating	IK10
Length (mm)	178
Projection (mm)	50
Product Type	Wall Lights

Power Factor	0.5
Lifetime L70 (hrs)	30000hrs
Lamp Base	None
Weight (Kg)	0.513
Height (mm)	76

Compliance & Approvals:

Warranty:

This product has a warranty period of 3 Years. Warranties may be available on certain products as indicated in the product description. Warranties are valid from the date of purchase.The warranty is invalid in the case of improper use, installation, tampering, removal of the Q.C. date label or installation in an improper working environment or installation. Should this product fail during the warranty period it will be replaced free of charge, subject to the correct installation of the original product and subsequent return of the faulty unit. Aurora does not accept responsibility for any installation costs associated with the replacement of this product and Aurora reserves the right to alter specifications without prior notice.