Product Description: mPro™ Baffle IP65 Dimmable Fire Rated Downlight

Baffle, integrated, fire rated 7W LED downlight with unique convertible design to fit ceiling voids as shallow as 70mm. Incorporated miniaturised NanoDrive™ power supply. Available in 3000K and 4000K, delivering up to 76lm/W.

SKU Code	Wattage	Colour	Lumens	Lumens/Watt	Beam Angle	SKU Type
AU-MPRO5/30	7	3000	500	72	40	Triac Dimmable
AU-MPRO5/40	7	4000	530	76	40	Triac Dimmable

Line Drawing

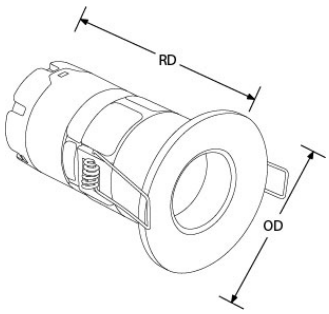

Polar Curve

Colour

Feature & Benefits

- Patented LEDchroic™ lens provides halogen appearance with LED efficiency, anti-glare and precise beam control
- 40° lens supplied
- FastRFix™ rapid install system connector included
- IC cap included
- ErP compliant - High colour rendering index (Ra) >80
- Separate emergency pack available - AU-FRLM10EM
- Rated to 30, 60 & 90 minute fire ceilings
- BS EN 1365-2: 2014 (Fire resistance)
- BS EN ISO 10140-2: 2010 & BS EN ISO 10140-3: 2010 + A1: 2015 (Acoustics)
- (L70) at a 40,000 hour lifetime
- BS EN 13141-1:2004 (Air leakage)
- 5 Year Warranty

Product Specs:

Input Voltage	220~240V AC
Power Factor	0.85
Lifetime L70 (hrs)	40000hrs
Weight (Kg)	0.422
Height (mm)	120
Cutout Diameter (mm)	65-72
Operating Temp. (Max) °C	45°C

Input Frequency	50/60HZ
IP Rating	IP65
Overall Diameter (mm)	88
Projection (mm)	4
Product Type	Downlights,Fire-Rated Downlight
Operating Temp. (Min) °C	-20°C

Compliance & Approvals:

Warranty:

This product has a warranty period of 5 Years. Warranties may be available on certain products as indicated in the product description. Warranties are valid from the date of purchase.The warranty is invalid in the case of improper use, installation, tampering, removal of the Q.C. date label or installation in an improper working environment or installation. Should this product fail during the warranty period it will be replaced free of charge, subject to the correct installation of the original product and subsequent return of the faulty unit. Aurora does not accept responsibility for any installation costs associated with the replacement of this product and Aurora reserves the right to alter specifications without prior notice.