Product Description: m10™ 10W Adjustable Dimmable Fire Rated Downlight

Adjustable, integrated, fire rated 10W LED downlight with driver-on-board and high voltage, single source LED chip. Fitted with CrystalCool™ thermal management.

SKU Code	Wattage	Colour	Lumens	Lumens/Watt	Beam Angle	Finish Colour
AU-FRLD812AKW/30	10	3000	460	46	40	White
AU-FRLD812AKW/40	10	4000	550	55	40	White

Line Drawing

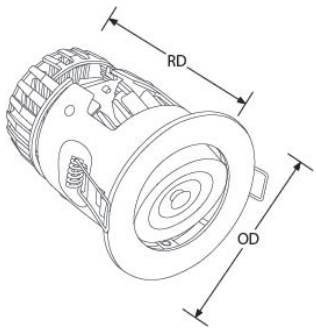

Polar Curve

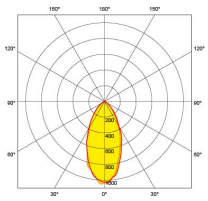

Colour

Feature & Benefits

- Rated to 30, 60 & 90 minute fire ceilings
- United Kingdom Patent Application No. 1405622.0
- icDOB™ (Driver on Board) for maximum reliability and lifetime - NO SEPARATE DRIVER REQUIRED
- Crystalcool™ next generation thermal management offers brighter light for longer
- Mains voltage single source HVLED™ chip eliminates overshadowing and offers controlled dimming
- Patented LEDchroic™ lens provides halogen appearance with LED efficiency, anti-glare and precise beam control
- 40° lens supplied (not interchangeable)
- FastFix™ rapid install system with 1.5m flex and plug fitted
- Twist&Lock™ IP65 Interchangeable white bezel included
- BS EN 1365-2:2000 (Fire resistance)
- BS EN ISO 140-3:1995 & BS EN ISO 140-6:1998 (Acoustics)
- BS EN 13141-1:2004 (Air leakage)
- (L70) at a 40,000 hour lifetime
- 5 year warranty – see auroralighting.com for details

Product Specs:

Input Voltage	220~240V AC
Power Factor	0.9
Lifetime L70 (hrs)	40000hrs
Weight (Kg)	0.546
Cutout Diameter (mm)	85-85
Operating Temp. (Max) °C	40°C

Input Frequency	50/60HZ
IP Rating	IP20
Overall Diameter (mm)	98
Height (mm)	111
Operating Temp. (Min) °C	-10°C

Compliance & Approvals:

Warranty:

This product has a warranty period of 1 Year. Warranties may be available on certain products as indicated in the product description. Warranties are valid from the date of purchase.The warranty is invalid in the case of improper use, installation, tampering, removal of the Q.C. date label or installation in an improper working environment or installation. Should this product fail during the warranty period it will be replaced free of charge, subject to the correct installation of the original product and subsequent return of the faulty unit. Aurora does not accept responsibility for any installation costs associated with the replacement of this product and Aurora reserves the right to alter specifications without prior notice.