Product Description: 2 Gang 2 Way Rotary Dimmer

One or two way switching, smooth dimming operation from 0-100% light output.

SKU Code
AU-DSP402

Line Drawing

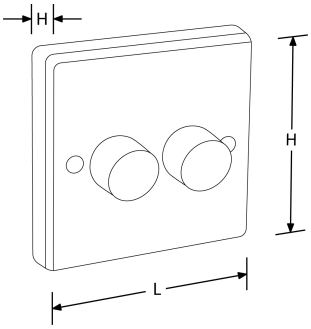

Polar Curve

Colour

White

Feature & Benefits

- Suitable for control of dimmable electronic transformers, toroidal transformers and tungsten lamps WITHOUT de-rating
- Not suitable for use with fluorescent lamps
- Leading edge phase control
- For use with resistive and inductive loads
- Integrated over-temperature protection fuse
- Module case ultrasonically sealed to reduce dimmer buzzing
- Smooth dimming operation from 0-100% light output
- Use a 25mm deep (minimum) mounting box for AU-DSP402
- One or two way switching
- Complies with the latest Electrical Safety standard for dimmer switches EN 60669-2-1:2000
- EMC compliance - EN 55015
- Available in white finish only
- Derate dimmer by 70% for LED loads

Product Specs:

Width (mm)	85	Length (mm)	85
Weight (Kg)	0.157	Height (mm)	24

Compliance & Approvals:

Warranty:

This product has a warranty period of 1 Year. Warranties may be available on certain products as indicated in the product description. Warranties are valid from the date of purchase.The warranty is invalid in the case of improper use, installation, tampering, removal of the Q.C. date label or installation in an improper working environment or installation. Should this product fail during the warranty period it will be replaced free of charge, subject to the correct installation of the original product and subsequent return of the faulty unit. Aurora does not accept responsibility for any installation costs associated with the replacement of this product and Aurora reserves the right to alter specifications without prior notice.