AURORA® LIGHTING

WallE™

Product Description: WallE™ GU10 IP44 Up/Down Wall Light

The WallE™ adjustable and up/down wall lights are ideal for accent lighting focusing on areas or features you want to light up. Available in 304 stainless steel or aluminium grey, white or black powder coated finishes. Fitted with a GU10 lamp holder to allow you to select the correct lamp for the application.

SKU Code	Finish Colour
EN-WL2BLK	Black
EN-WL2G	Grey
EN-WL2W	White

Line Drawing

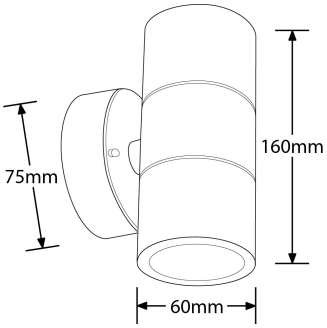

Polar Curve

Colour

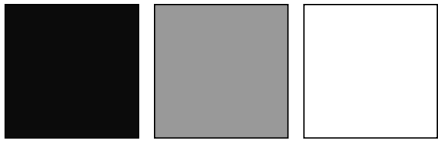

Black Grey White

Feature & Benefits

- IP44 Mains adjustable and up/down wall lights
- Suitable for indoor and outdoor use
- Stainless steel finish - 304 Stainless steel
- Grey, Black and White - Aluminium
- Tempered glass diffuser
- For use with GU10 lamps – lamps not included (Max 35W)
- Screw on cover for easy lamp change
- 3 year warranty

Product Specs:

Input Voltage	220~240V AC
Lamp Base	GU10
Weight (Kg)	0.431
Height (mm)	160
Base Length (mm)	75
Product Type	Wall Lights

IP Rating	IP44
Overall Diameter (mm)	60
Projection (mm)	90
Base Diameter (mm)	75
Base Width (mm)	22

Compliance & Approvals:

Warranty:

This product has a warranty period of 2 Years. Warranties may be available on certain products as indicated in the product description. Warranties are valid from the date of purchase.The warranty is invalid in the case of improper use, installation, tampering, removal of the Q.C. date label or installation in an improper working environment or installation. Should this product fail during the warranty period it will be replaced free of charge, subject to the correct installation of the original product and subsequent return of the faulty unit. Aurora does not accept responsibility for any installation costs associated with the replacement of this product and Aurora reserves the right to alter specifications without prior notice.