Product Description: Ecylps 14W Adjustable Downlight

Part of the Eclyps range, the 14W Adjustable COB Downlight luminaire is ideal to set accents within an installation such as the illumination of wall paintings along corridors or in meeting rooms. With a lumen package of 750lm and adjustable head, spaces are further enhanced by applying Eclyps accessories such as Mirror, Black or Silver Matt baffles, Honeycomb attachments or colour filters. Supplied with CRI80 as standard and SDCM<3, clients can also opt for CRI90 options to further enhance colour quality of the installation. Beam angles include 15°, 24° and 36°. L70 is 50,000 hrs.

SKU Code	Wattage	Colour	Lumens	Lumens/Watt	Beam Angle	Finish Colour
AU-EC14A1DTAK/30	14	3000	750	54	15	White
AU-EC14A1DTAK/40	14	4000	750	54	15	White
AU-EC14A1EMNDAK/30	14	3000	750	54	15	White
AU-EC14A1EMNDAK/40	14	4000	750	54	15	White
AU-EC14A1NDAK/30	14	3000	750	54	15	White
AU-EC14A1NDAK/40	14	4000	750	54	15	White
AU-EC14A2DTAK/30	14	3000	750	54	24	White
AU-EC14A2DTAK/40	14	4000	750	54	24	White
AU-EC14A2EMNDAK/30	14	3000	750	54	24	White
AU-EC14A2EMNDAK/40	14	4000	750	54	24	White
AU-EC14A2NDAK/30	14	3000	750	54	24	White
AU-EC14A2NDAK/40	14	4000	750	54	24	White
AU-EC14A3DTAK/30	14	3000	750	54	36	White
AU-EC14A3DTAK/40	14	4000	750	54	36	White
AU-EC14A3EMNDAK/30	14	3000	750	54	36	White
AU-EC14A3EMNDAK/40	14	4000	750	54	36	White
AU-EC14A3NDAK/30	14	3000	750	54	36	White
AU-EC14A3NDAK/40	14	4000	750	54	36	White

Line Drawing

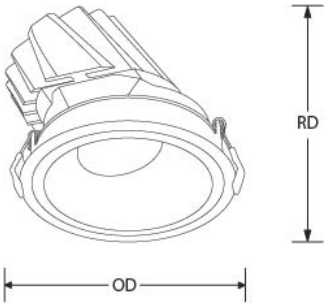

Polar Curve

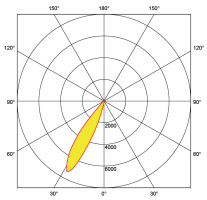

15° Full Tilt

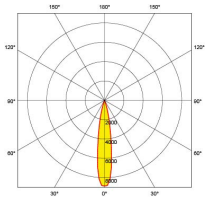

15° Straight

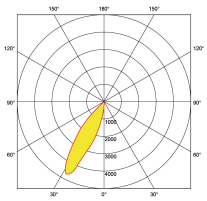

24° Full Tilt

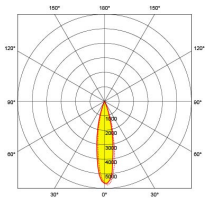

24° Straight

Colour

Feature & Benefits

- Dimmable with driver
- CRI 80 (Selected CRI 90 options available)
- Up to 91lm/W
- Beam angles available in 36°, 60° with 15° & 24° to special order
- Baffle/Filter/Reflector accessories available
- SDCM < 3
- 5 Year Warranty

Product Specs:

Input Voltage	220~240V AC
Power Factor	0.95
Lifetime L70 (hrs)	50000hrs
Cutout Width (mm)	100
Cutout Diameter (mm)	100-100
Operating Temp. (Max) °C	50°C

Input Frequency	50/60HZ
IP Rating	IP20
Overall Diameter (mm)	113
Height (mm)	119
Operating Temp. (Min) °C	-20°C

Compliance & Approvals:

Warranty:

This product has a warranty period of 5 Years. Warranties may be available on certain products as indicated in the product description. Warranties are valid from the date of purchase.The warranty is invalid in the case of improper use, installation, tampering, removal of the Q.C. date label or installation in an improper working environment or installation. Should this product fail during the warranty period it will be replaced free of charge, subject to the correct installation of the original product and subsequent return of the faulty unit. Aurora does not accept responsibility for any installation costs associated with the replacement of this product and Aurora reserves the right to alter specifications without prior notice.